WWWPic2 - Circuit Schematic

A World Wide Web server in a pic

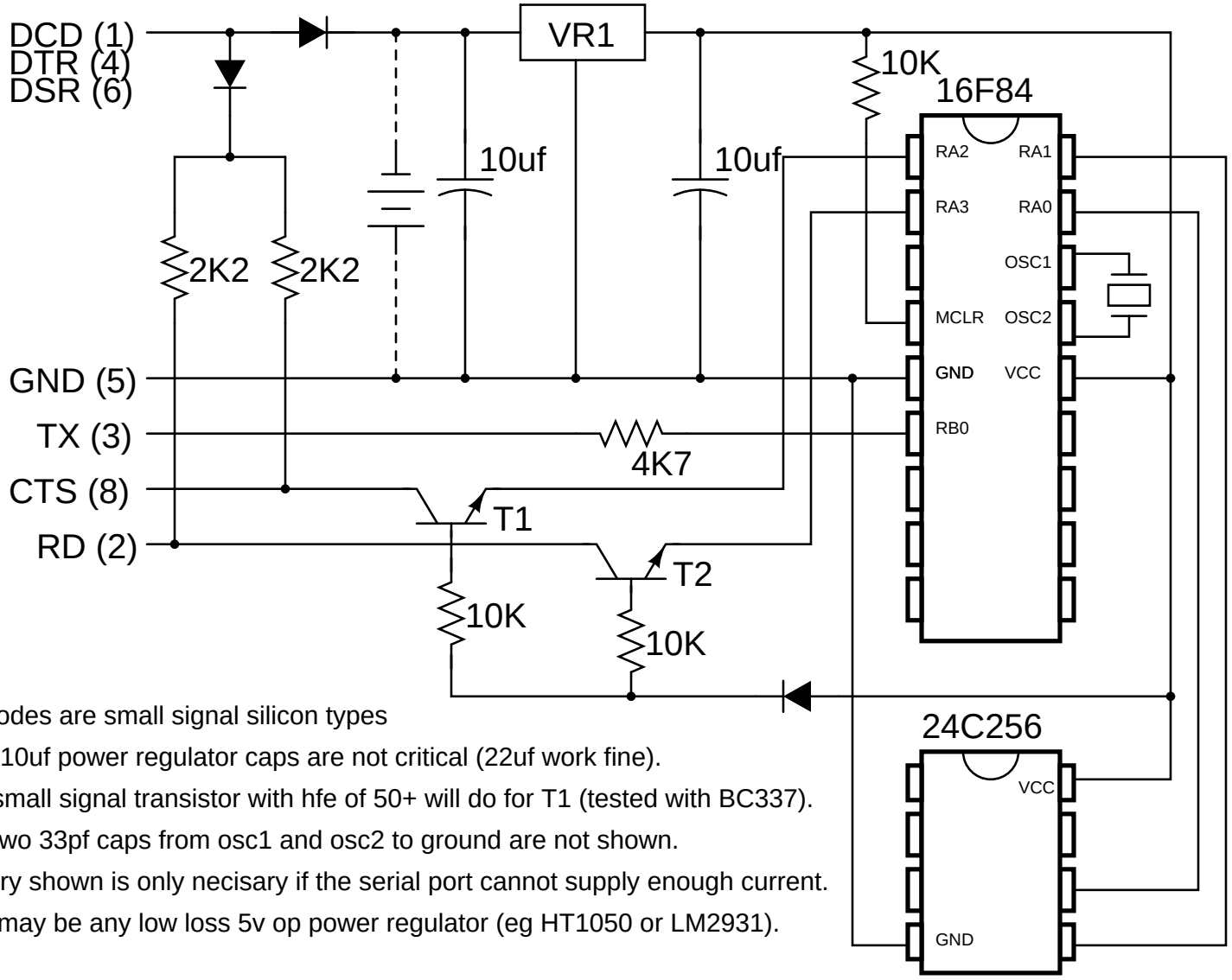

All diodes are small signal silicon types

Both 10uf power regulator caps are not critical (22uf work fine).

Any small signal transistor with hfe of 50+ will do for T1 (tested with BC337).

The two 33pf caps from osc1 and osc2 to ground are not shown.

Battery shown is only necisary if the serial port cannot supply enough current.

VR1 may be any low loss 5v op power regulator (eg HT1050 or LM2931).